Application Note CTAN #164

The Application Note is pertinent to the Unidrive Family

Remote Keypad Control

It is natural for one to desire the Unidrive to be controlled digitally from a remote keypad/display unit. Our CTIU family of Operator Interface Units, provide the necessary functions to achieve such control. This Application Note will address a simple application example whereby the following functions are implemented:

Remote:

Start/Stop of Drive
Forward-Reverse
Increase/Decrease of Speed

The minimum components needed would be a UD7X module and a keypad/display unit for communication purposes.

CTIU 110 (shown)

Setup

The Unidrive comes preset with input terminal assignments that direct commands like Run, Jog, Forward/Reverse etc. to certain control bits within Menu 6 called Sequencing bits. These control bits can act differently depending on the selected Sequencing Mode (see parameter #6.04).

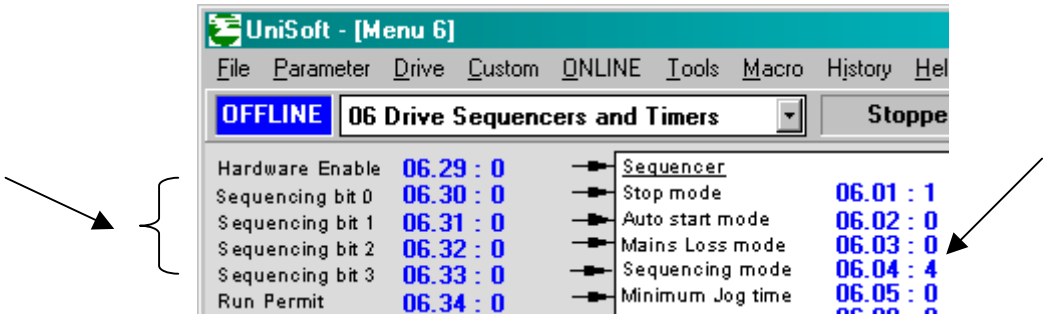

To allow an external communicating device (Keypad/Display Unit) to Run/Stop the drive, these terminal assignments must be de-selected or un-assigned.

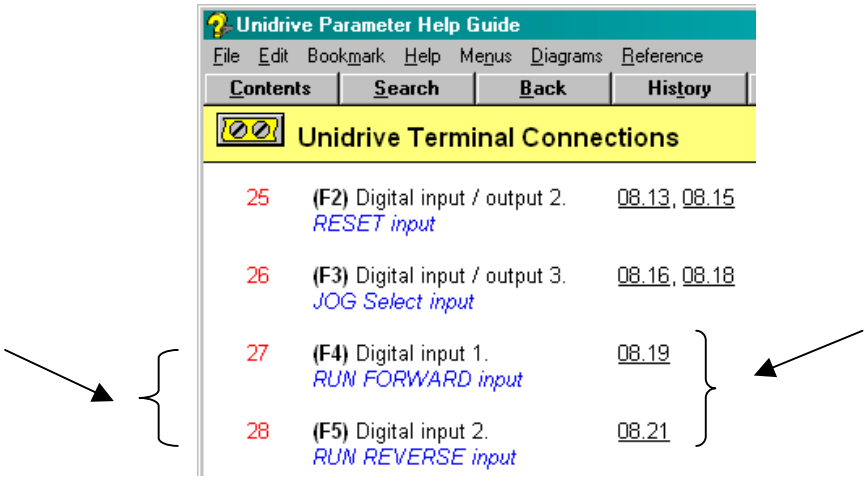

To accomplish this you would merely set #8.19 and #8.21=0.00 and depress RESET.

Since we will be controlling the drive through control bits that will be maintained in one state or another, we must select a sequencing mode that offers maintained control. Sequencing mode 3 will be suitable as described by the table below (see parameter #6.04). So we would set #6.04=3 to select this mode.

<u>Sequencing mode 3 Maintained Mode</u>

#6.30	**Sequencing bit 0**	**-Run**
	Sequencing bit 1	-Jog
#6.32	**Sequencing bit 2**	**-Forward/Reverse**
	Sequencing bit 3	-Not used

We will want to control #6.30 and perhaps #6.32 using a couple of Function keys on the CTIU.

Now we will want to consider what we would like to see on the keypad/display unit and what keys will do what. I decided to display what direction the drive was set for and to display whether the Drive was Running or Stopped. I also wanted to have a couple of keys to allow the speed setpoint to be trimmed.

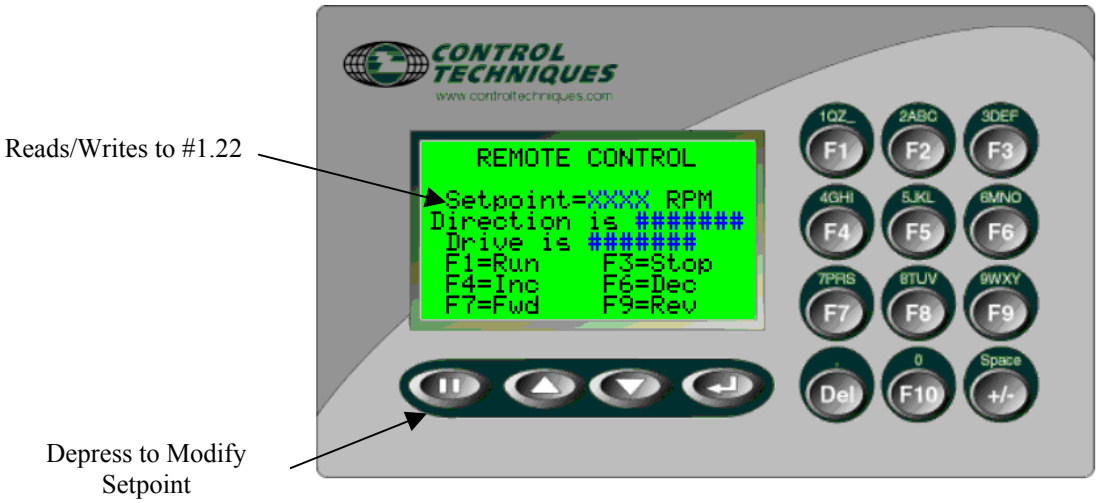

Using the CTIU configurator (which is free from our website), you can assign the function keys to perform various things. This is found under EDIT/Function Keys.

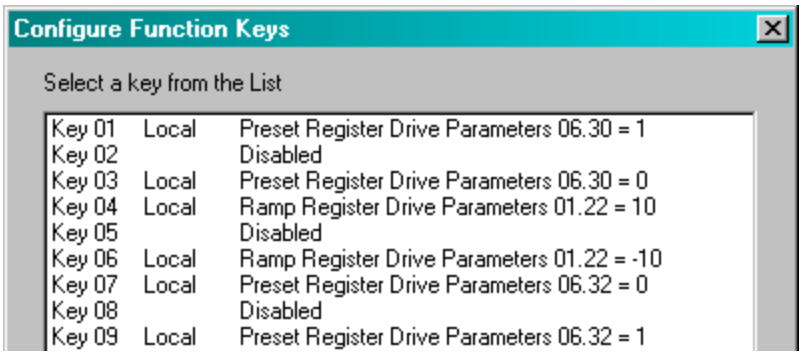

For keys 4 and 6, I decided to assign those to an Increase/Decrease function. Whenever, those keys are depressed, the value in Preset #1.22 is read and either incremented by +10 or –10.

For my example, I selected Preset 2 as my setpoint speed register. To make the drive obey this reference #1.15 needs select Preset 2 and #1.14 needs to select the Preset Speeds. See below

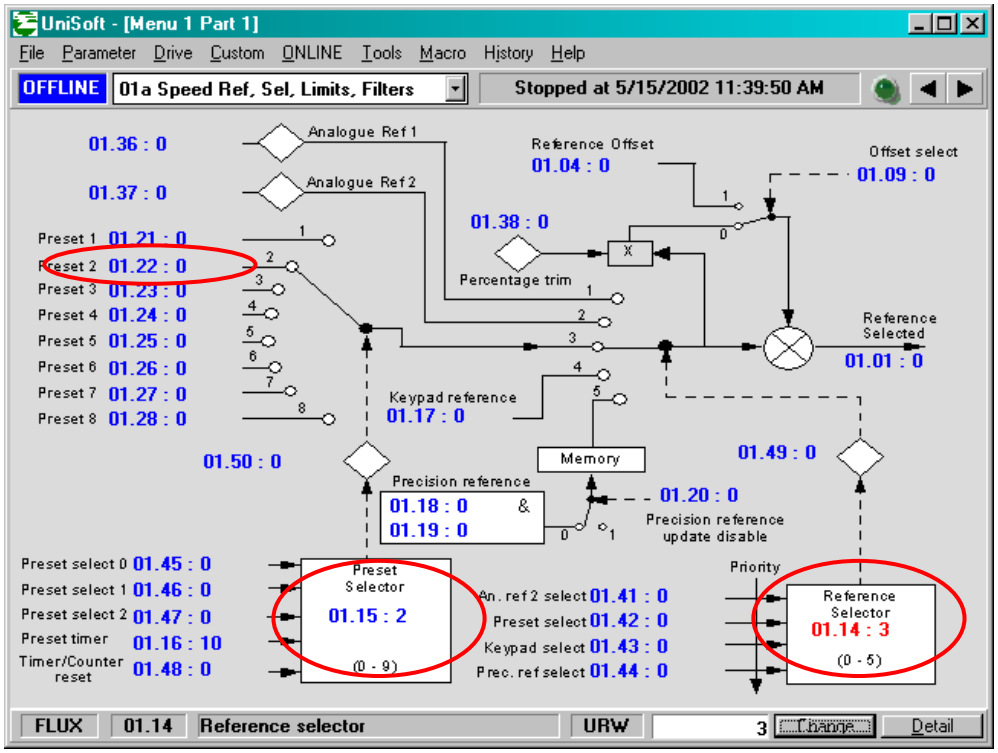

Summary

This App Note provides a general outline of how you might achieve Remote Control and some specifics using our CTIU Operator Interface Units. Packaged with this Application Note is a CTIU file (named RemCntrl.cmc) from this example to serve as a starter for your experimentation and refinement. Also packaged with this Application Note is a Unidrive Demo file (named RemCntrl.ctd) that will setup the Unidrive (Vector mode) per this example.

When using Remote Control schemes, one should realize that once a Drive is started remotely, should communications fail, that the Remote Control device may not be able to Stop the Drive. For this reason, the input on the Unidrive (Pin 30) should be hard-wired to an E-Stop pushbutton and the assignment for the Pin 30 input made to be External Trip by setting #8.09=0.

Questions ?? Ask the Author:

Author: **Ray McGranor** (716)-774-0093 **e-mail :** ray.mcgranor@emersonct.com